Cellular IoT node

TX-S4
HOW IT WORKS
A BATTERY SENSOR ON A PIPE, A CELL TOWER, A CLOUD SERVER

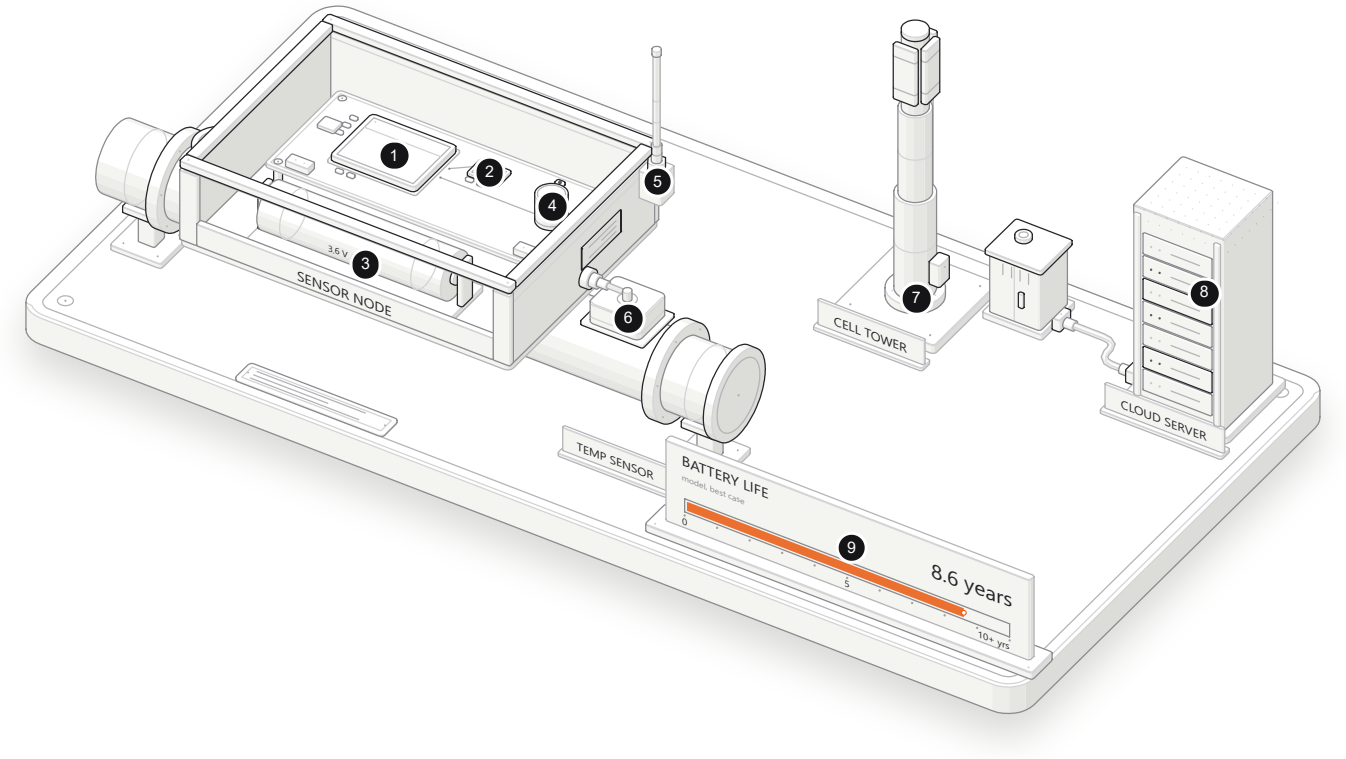

How can a sensor on one small battery report over a cellular network for years?

The node sleeps almost all the time: radio off, still registered, drawing about 2.7 µA. On schedule, or at once on an alarm, it wakes, reads its sensor, sends one short radio burst to the tower and the cloud server, listens briefly for a reply and sleeps again. How often it reports decides how long the battery lasts.

2.7 µA
SLEEP CURRENT IN POWER SAVING MODE (EXAMPLE MODULE)

0.1 J
ONE SHORT CHECK-IN ON LTE-M, STRONG SIGNAL (EXAMPLE)

2.6 Ah
ONE AA-SIZE LITHIUM CELL, 3.6 V

8.6 yrs
MODEL: ONE REPORT EVERY 15 MIN ON LTE-M, BEST CASE

01 **Processor + modem**
Runs the node and talks LTE-M or NB-IoT.

02 **SIM**
Holds the key that proves the node to the network.

03 **Battery**
AA-size lithium cell, 3.6 V, 2.6 Ah.

04 **Capacitor**
Helps the cell with short radio bursts.

05 **Antenna**
Sends the burst to the tower.

06 **Temperature sensor**
One reading, then off: about 0.15 µA.

07 **Cell tower**
Passes the reading into the network.

08 **Cloud server**
Collects readings; replies only while the node listens.

09 **Battery life panel**
The model's estimate for the chosen settings.